25-1000 Battery Monitor

Operation Manual

COMPLIANCE

ANSI (IEEE) C37.90.1 [Surge Withstand]
IEC 61000-4-3 [EMC]
DNP3 Self Certified to Level I

Table of Contents

Product Overview…… 3

Specification…… 4, 5

Control Panel Description…… 6

Alarms and Parameters – Change / View…… 7-9

Operational Flow Diagram…… 10

Serial Communications…… 11-14

Terminal Block wiriing and Annunciator output Connector J1…… 15

Typical Wiring Diagram…… 16

Mechanical Dimensions…… 17

Product Overview

The Electroswitch 25-1000 panel mount Battery Monitor is a breakthrough in battery monitoring and ground fault detection. This highly accurate panel mount instrument is powered by the same battery it monitors. It displays charging voltage, ripple voltage, ripple current (with optional current probe, 25-1100-H1) positive/negative ground faults and high impedance faults based on ripple voltage and ripple current.

The alarm outputs are designed with form C relay contacts and can indicate +bus / -bus leakage, ground shorts, over/under voltage, high ripple voltage, low ripple current, loss of AC voltage to the charger and high impedance due to corrosion buildup.
Also included, an additional feature that generates a pulse through the ground fault path enabling the operator to locate the exact location of the short circuit using the optional model 25-1100-GF handheld ground fault detector.

All alarm set points and system functions are stored in on-board non-volatile memory and will not be lost even when power goes down. Fail safe operation is provided by relay contact when power is lost. The instrument also provides a time delay alarm feature that allows the operator to delay alarms up to 60 seconds preventing false alarm indications. The 25-1000 Battery Monitor supports DNP3 or Modbus serial communication protocols over a RS-485 data line. Industry standard baud rates up to 19.2K. Additionally the instrument provides 4-20mA or 0-1mA analog outputs.

25-1000 Battery Monitor Specifications

1. **Display Readout:** 4 ½ digits red numeric LED's, plus four 14-segment alpha-numeric LED annotation and configuration digits

2. **Battery/Input Voltage Range:** 90 to 180 VDC, Accuracy: ± 0.2V DC (for 125 V model)

3. **Input Power:** 3 VA_{max}

4. **Input Resistance:**
   Positive terminal to ground: 30.82 K Ohms, ± 1%
   Negative terminal to ground: 30.82 K Ohms, ± 1%

5. **Displayed Measurements:**
   a. Battery Voltage
   b. **+** Bus voltage to Ground
   c. **-** Bus voltage to Ground
   d. GFV - Ground Fault Voltage
   e. RVV - Ripple Voltage
   f. RIV - Ripple Current (w/optional sensor)

6. **Displayed Modes:**
   a. TD - Time Delay (Sec)
   b. 1ϕ or 3ϕ - Charger Input Power Phase

7. **Scanning:** In *Manual Mode*, measurement is selected by briefly pushing the scan/select button. In *Scan Mode* (Auto LED ON) the display cycles through all six measurements, plus time delay and AC charger phase. Mode is changed by pressing and holding the scan button

8. **Alarms:** Alarm levels are set using the setup menu

9. **Alarm relay form C Contacts:**
   Relay 1: + Ground Fault
   Relay 2: - Ground Fault
   Relay 3: High Battery Voltage
   Relay 4: Low Battery Voltage, ripple voltage, ripple current, loss of AC power to charger

10. **Time Delay:** Alarm delay configurable from 1 to 60 seconds

11. **Reset (Alarm relay reset):** In non-*Latching Mode (L OFF)* the alarm relay contact clears automatically (after the time delay period) when the fault condition is cleared. In *Latching Mode (L ON)* the alarm relay latches on. To reset the alarm relay, the fault condition must be removed. Then pressing the RESET button or shorting RESET pin TB2-20 to BAT- pin TB1-4 (negative bus) will reset the alarm relay

12. **Contact rating:** 2.0A at 120VAC or 28VDC, 25mA at 150VDC

13. **Relay outputs:** 4 form C alarm relay output contacts

14. **Operating Temperature:** -4°F to 131°F (-20°C to 55°C)

15. **Analog outputs:** 4-20 mA, or optional 0–1.00 mA

16. **Serial Communications:** DNP 3 or optional Modbus serial (RS485) interface. Refer to serial communication section, pages 11-14

17. **Ground fault location:** With optional handheld ground detector (25-1100-GF) "BB" option. Pulse generator feature must be turned on, see setup menu table on page 7

18. **High impedance measurement (option):** For corrosion detection with current sensor p/n: 25-1100-H1

19. **Annunciator port J1 (option)**: Used with p/n: 7-025-498-J3.0 External LED indication, ± ground fault, high voltage, low voltage, excess ripple voltage and loss of AC to charger

20. **DNP and Modbus serial communications protocols:** See 826-501A.C DNP Profile document on www.electroswitch.com/documents

Parameters and settings (as displayed in AUTO mode)	
BAT	Battery Voltage VDC
+BUS	+BUS Voltage VDC
-BUS	-BUS Voltage VDC
GFV	Ground Fault Voltage VDC
RVV	Ripple Voltage mV AC
RIV	Ripple Current mA AC
TD	Time Delay in Seconds
1PH/3PH	Single/three Phase Power of AC charger

Alarms / Settings	Description	Factory settings (default)	Alarm setting range
HI BAT	High voltage alarm setting	142 VDC	125 to 150VDC
LO BAT	Low voltage alarm setting	105 VDC	100 to 125VDC
+GND	+GND fault alarm setting	+13VDC	13 to 100VDC
-GND	- GND fault alarm setting	-13VDC	-13 to -100VDC
RVV	High ripple voltage alarm setting	0.200 V AC	0.005 to 2.000V AC
RIV	Low ripple current alarm setting	.010 A AC	0.005 to 2.000A AC
TD	Time delay alarm limit setting	2 Sec	1 to 60 Sec
1PH/3PH	Phase selection, 1 Phase or 3 Phase	1 phase	1ph to 3ph
PON/POFF	Pulse generator (Off/On)	Pulse gen off	Off/On
BON/BOFF	Buzzer (Off/On)	Buzzer off	Off/On
LON/LOFF	Latch relay (Off/On) (with all faults cleared	Latch off	Off/On
SYS	Enable alarms and settings	Factory defaults	On/Off/Set
CAL	Calibrate 4-20mA and voltage reading	4-20mA	Adjust

Control Panel Description

1. **Main measurement display** (upper readout)
   Measurement display: Battery voltage, +bus voltage, -bus voltage, ground fault voltage, ripple voltage, ripple current (with optional sensor), time delay and AC input mode (single or 3 phase)
2. **Parameter/Setup Menu display** (lower readout)
   Indicates parameters displayed in the upper readout and fault indications
3. **Alarm LED**
   Indication for all alarm conditions
4. **Reset button**
   When in latch mode, resets all alarm relays and alarm indications
5. **Limit button**
   Used to navigate setup menu
6. **T/R bi-color LED** (Green/Red)
   Indicates transmit or receive operation, Red-Transmitting / Green-Receiving
7. **Auto LED**
   Indicates Auto-Scanning (scrolling) mode
8. **Up button**
   Increases limit set point and calibration values (press and hold to increase rate)
9. **Down button**
   Decreases limit set point and calibration values (press and hold to increase rate)
10. **Pulse on LED**
    Indicates internal pulse generator is activated
11. **Scan/Manual Button**
    Toggle between Auto and Manual mode then scrolls through all the readings and set points
12. **Buzzer**
    Located behind the bezel

13. Alarms and Parameters – Change / View

Notes:

- Ground Fault Alarm conditions are prioritized and displayed
- The lower line display indicates the parameters being monitored in the upper display
- Refer to the *operation flow diagram* on page 10
- For factory default settings see page 5
- Timeout of menu mode in 3 min if no buttons are pressed

a) Press and hold the limit button (approximately 4 seconds) until "LIMIT" is flashing

b) Short-press the LIMIT button to toggle through alarms and set points shown below, then using the UP / DOWN button, adjust the alarm set points and functions as needed

LIMIT	
HI BAT	High voltage alarm limit setting DCV
LO BAT	Low voltage alarm limit setting DCV
+GND	+GND fault alarm limit setting DCV
-GND	- GND fault alarm limit setting DCV
RVV	Ripple voltage alarm limit setting mV AC
RIV	Ripple current alarm limit setting mA AC
TD	Time delay alarm limit setting
1PH/3PH	Phase selection, 1 Phase or 3 Phase
PON/POFF	Pulse generator (On/Off). **Pulse generator must be turned off when not in use**
BON/BOFF	Buzzer (On/Off)
LON/LOFF	Alarm relay latch (On/Off). **All faults must be cleared to reset alarm latch**
SYS	Enable alarms and settings
CAL	Calibrate 4-20mA (Optional 0-1mA) and voltage reading

14. SYS - View or Change System Settings

a) To turn these features ON or OFF follow above procedure steps 1 and 2, refer to the flow diagram on page 9.

b) Short-press the LIMIT button and toggle through the flashing set points and parameters until you reach SYS (system). "SYS" is flashing and system software version is displayed

c) Press and hold LIMIT button for approx. 4 sec., the "AC N" (loss of AC charger power) annunciator comes on (SYS Annunciators are shown below).

d) Short press the LIMIT button to toggle through these features, and use the UP / DOWN button to turn them ON or OFF or change the values.

***AC** (Y/N)	Loss of AC power to the Charger
***RVV** (Y/N)	High Ripple Voltage
***RIV** (Y/N)	Low Ripple current (optional probe, 25-1100-H1)
***HI Z** (Y/N)	High impedance input
ADDRESS SETTING	Set meter address
BAUD RATE SELECTION	Select communication baud rate

***Note: To save individual or all alarm changes you must press and hold LIMIT button (approx. 4 sec)**

To exit System Setup you must be in either **ADDRESS SETTING** or **BAUD RATE SELECTION** mode, then press and hold LIMIT button for approx. 4 sec.

15. CAL - Checking and/or Calibrating 4-20 or 0-1mA output and Voltage reading

Note: Use a certified digital multimeter which meets or exceeds the accuracy and resolution of your system
Timeout of CAL mode in 2 min if no buttons are pressed

1. Connect the DC current meter's positive (+) lead to TB2-16 and the negative (-) lead to TB2-17,
2. ILO (low current limit) annunciator will be displayed, refer to *operation flow diagram* on page 10
3. Use the UP/DOWN button to adjust (if necessary) the low current limit to 4.00mA
4. Short-press the LIMIT button and go to the next calibration point, IHI (high current limit)
5. Use the UP/DOWN button to adjust (if necessary) the high current limit to 20.00mA
6. Connect the voltage input leads of your digital multimeter to TB1-1 and TB1-2
7. Short-press the LIMIT button and go to the next calibration point, VCAL
8. Use the UP/DOWN button to adjust (if necessary) the voltage readout to match the multimeter

ILO	Adjust 4.00 mA or 0.0 mA setting
IHI	Adjust 20.00 mA or 1.00 mA setting
VCAL	Adjust battery monitor voltage readout

9. Exit menu, press and hold LIMIT button for approx. 4 sec

16. ALARM LED Conditions

Flashing LED	**LED ON (Steady state)**
Loss of AC power to charger	High battery limit
Ripple voltage Limit	Low battery limit
Ripple current limit	+GND fault
High impedance limit	-GND fault

17. Reset button

Press and hold – resets alarms, relay contacts and annunciators
Note: All faults must be cleared in order to reset alarm relay contacts and annunciators

18. Limit button

Press and hold (4 sec) to navigate through setup or save settings and toggle through menu

19. T/R LED

Indicates transmitting and receiving indication, Red = Tx, Green = Rx

20. AUTO LED

Indicates unit is in AUTO Scanning mode

21. Up / Down Buttons

Short press or press and hold to increase/decrease set points, calibration adj. and turn functions on/off

22. PULSE ON LED

Indicates the internal pulse generator is activated. Used with the 25-1000-GF handheld ground fault detector to location of the short circuit

23. SCAN Button

***Manual Mode*:** Enables the user to view each measurement and setting by short pressing the SCAN/MANUAL button. See table below

Auto Mode: The instrument continuously scrolls through measurements and settings every 3 seconds, to place the instrument into Auto Mode (or back to Manual Mode) press and hold the SCAN/MANUAL button for approx. 4 sec.

BAT	Battery voltage
+BUS	+Bus voltage
-BUS	-Bus voltage
GFV	Ground Fault Voltage
RVV	Ripple Voltage (mV)
RIV	Ripple Current (mA)
TD	Time Delay
1PH/3PH	Single or Three Phase input power to AC charger being monitored

24. BUZZER BON/BOFF (Audible buzzer located at the back of the bezel)

To turn buzzer ON/OFF go into setup menu by pressing LIMIT button (4 sec), scroll down to BON and hit the UP / DOWN button to turn it On/off.

ELECTROSWITCH
25-1000 BATTERY MONITOR
OPERATION FLOW DIAGRAM

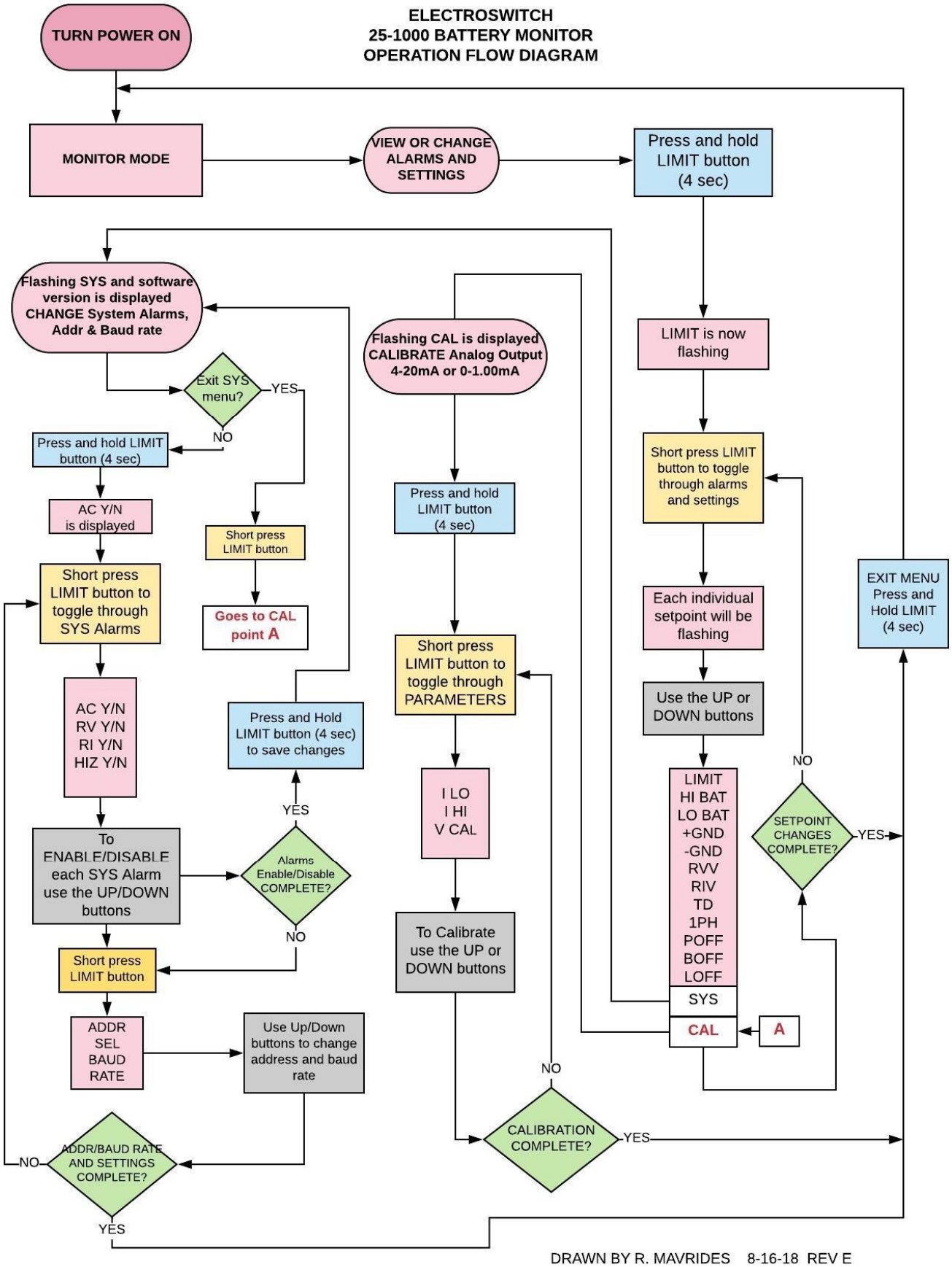

DRAWN BY R. MAVRIDES 8-16-18 REV E

SERIAL COMMUNICATION

Modbus Protocol

This section describes the Modbus communications protocol of the 25-1000 Series Arga Battery Monitor (ABM), and how to exchange information with the ABM switch utilizing the Modbus protocol. The ABM Series communicates by emulating a subset of the Modbus protocol in the operational software of the Lockout Relay. Modbus communications uses a Master-Slave technique in which only the master can initiate a transaction. This transaction is called a 'Query'. When appropriate, a slave responds to the query. When a master communicates with a slave, information is provided or requested by the master. When a slave device receives a query, the slave responds by either supplying the requested data to the master or performing the requested action. A slave device never initiates communications on the Modbus network, and will always generate a response to the query addressed to it unless certain error conditions occur. The ABM Series is designed to operate only as slave device.

Device Address

The Device Address contains the unique Modbus address of the slave being queried. Modbus protocol limits a device address from 0 to 247 and even though addresses beyond this range can be selected they will be ignored. Address 0 is the broadcast address but not all functions support "broadcast". The address and baud rate are user selectable in the SYS menu.

Function Code

The Function Code in the query message defines the action to be taken by the addressed slave.
The Arga battery monitor stores user input information into holding register address space in the following order fault alarms, battery voltage, fault voltage, minus ground voltage, ripple voltage, and ripple current. They start at the programmed first register location. This device supports the following function codes;

Function 03 (03h) – Read Holding Registers – Used to read the measurements of the meter.
Function 05 (04h) – Read Input Registers – Used to read the measurements of the meter.
Function 08 (08h) – Diagnostic Sub function 0 – Used to test the relay.

Alarms Bit Description

Point Index	Name/Description	Change Event Class (1, 2, 3 or none)
0	High Battery Alarm (1 = Alarm)	1
1	Low Battery Alarm (1 = Alarm)	1
2	Plus Ground Fault Alarm (1 = Alarm)	1
3	Minus Ground Fault Alarm (1 = Alarm)	1
4	Ripple Voltage Alarm (1 = Alarm)	1
5	Ripple Current Alarm (1 = Alarm)	1
6	AC Power Fail Fault Alarm (1 = Alarm)	1
7	High Impedance Alarm (1 = Alarm)	1

1st Register pair – Alarms
2nd Register Pair – Battery Voltage in millivolts

3rd Register Pair – Fault Voltage in millivolts
4th Register Pair – Minus Ground Voltage in millivolts
5th Register Pair – Ripple Voltage in millivolts
6th Register Pair – Ripple Current in millivolts

DNP3 Protocol

This section describes the "DNP3" communications protocol used by the ABM, and how to exchange information with the battery monitor utilizing the "DNP3" protocol. The battery monitor communicates by emulating a subset of the "DNP3" communications protocol in the operational software and is self-certified to level one. This implementation of the DNP3 protocol will respond to single fragment and will only generate single fragment responses. Unsolicited responses and application and DLL level retries are not supported. The ABM is referred to as an IED (Intelligent Electronic Device) and will respond to a DNP3 message if there are no detected errors in the message. The address of the ABM switch matches the address of the destination field in the message, and message requires a reply. The addressing range of the ABM switch is 1 to 255. See below for a description of valid messages, their actions, and replies.

Device Address

The Device Address Field of the Data Link layer will support addresses from 0 to 255 and 65535 which is the "BROADCAST" address. All devices will act on the broadcast address so care must be taken in using it. The ABM switch will not send a reply to a broadcast address. Each ABM switch can have its personal address and baud rate set or changed by entering the system menu.

Supported Data Link Layer Functions

FUNCTION		DESCRIPTION	ACTION
0	SEND – Confirm expected.	Reset of link	Sends confirm and sets FCB bit
1	SEND – Confirm expected.	Reset of user process	Not implemented
2	SEND – Confirm expected.	Test Function.	Not implemented
3	SEND – Confirm expected.	User Data	Passes data to application layer and issues a data link confirmation
4	SEND – No confirm expected	Unconfirmed Data	Passes data to application layer

Supported Application Layer Functions

FUNCTION		DNP OBJECT USED
0	CONFIRM	Clears class 1 data
1	READ	DNP3 Object 60 - Class 0,1,2,3. DNP3 Object 30 – Read point.

2	WRITE	DNP3 Object 80 – Clear IIN Restart Bit
129	RESPONSE	DNP3 Object 1 – Variation 1 – 8 Status points DNP3 Object 30 – Variation 3 - 5 analog values DNP3 Object 2 – Variation 1 - Event Log

Meter Functions

SCS FUNCTION	DNP MESSAGE
Get Meter Fault Status	CLASS 0 – Object 60, Variation 1 Qualifiers: All data. (06H) APPLICATION FUNCTIONS SUPPORTED: READ RETURNS: Application Response Function with STATUS Object 1, Variation 1 and Object 30 - Variation 3 (as millivolts) Qualifier: No index packed (00H) POINTS: 8. See Point description.
Get Meter Event Log, **(Changed Status)**	CLASS 1,2,3 – Object 60, Variation 2, 3, or 4 Qualifiers: All data. (06H) When data is available then in Class 1 data bit is set. APPLICATION FUNCTIONS SUPPORTED: READ RETURNS: Application Response Function with Object 2, Variation 1 Qualifier: 1 octet index, 8 bit quantity (17H) POINTS: Changed points (10 Max) if points changed since last read. If no points changed then an application response is returned with no object. (See CLASS 1 point meaning below for Event Log Description.)
Clear Restart Bit	CLASS 80 – IIN, Variation 1 Qualifier: No index (0H) APPLICATION FUNCTIONS SUPPORTED: WRITE. RETURNS: Null Response.

Point List

Binary Input Points

Static (Steady-State) Object Number: **1**
Change Event Object Number: **2**
Request Function Codes supported: **1 (read)**
Static Variation reported when variation 0 requested: **1 (Binary Input without status)**
Change Event Variation reported when variation 0 requested: **2 (Binary Input Change)**

Point Index	Name/Description	Change Event Class (1, 2, 3 or none)
0	High Battery Alarm (1 = Alarm)	1
1	Low Battery Alarm (1 = Alarm)	1
2	Plus Ground Fault Alarm (1 = Alarm)	1
3	Minus Ground Fault Alarm (1 = Alarm)	1
4	Ripple Voltage Alarm (1 = Alarm)	1
5	Ripple Current Alarm (1 = Alarm)	1
6	AC Power Fail Fault Alarm (1 = Alarm)	1
7	High Impedance Alarm (1 = Alarm)	1

Changes of any of these alarm states will set the class 1 data IIN bit indicating class 1 data available. If more than 10 events occur without being read then the buffer overflow IIN bit will be set and the oldest event data will be lost.

Analog Input Points

Static (Steady-State) Object Number: **30**
Change Event Object Number: **NA**
Request Function Codes supported: **1 (read)**

Point Index	Name/Description	Change Event Class (1, 2, 3 or none)
0	Battery Voltage (millivolts)	None
1	Fault Voltage (millivolts)	None
2	Minus Ground Voltage (millivolts)	None
3	Ripple Voltage (millivolts)	None
4	Ripple Current (millivolts)	None

TERMINAL BLOCK WIRING

ANNUNCIATION J1 CONNECTOR	
J1-1	+ GND FAULT
J1-2	POWER GROUND
J1-3	- GND FAULT
J1-4	+5 V (OUTPUT)
J1-5	HIGH BAT.
J1-6	RIPPLE VOLTAGE
J1-7	LOW BAT.
J1-8	LOSS AC POWER

Note: The above connector is used to interface with Electroswitch item p/n: 7-025-498-J3.0-2/1
5 Volt output (J1-4) current: 10mA$_{max}$
Output drive current of individual pins: 0.5mA$_{max}$
Output sink current of individual pins: 3.0mA$_{max}$

TB1-1				
TB1-1	TB1-2	TB1-3	TB1-4	TB1-5
AC LINE	AC NEUT	EXT. GND	BAT-	BAT+

TB2			TB2		
TB2-1	N.O	LO BATTERY VOLTS RVV RIV HI Z AC POWER LOSS	TB2-11	COM	
TB2-2	N.C		TB2-12	N.C	LO BATTERY VOLTS RVV RIV HI Z AC POWER LOSS
TB2-3	COM	HI. BATTERY	TB2-13	RS485-A	
TB2-4	N.O		TB2-14	RS485-B	SERIAL OUT
TB2-5	N.C		TB2-15	RS485-S	
TB2-6	COM	-GND FAULT	TB2-16	4-20mA OUTPUT	*(Y)
TB2-7	N.O		TB2-17	4-20mA RETURN	*(Z)
TB2-8	N.C		TB2-18	CUR. SENSOR +	
TB2-9	COM	+GND FAULT	TB2-19	CUR. SENSOR -	
TB2-10	N.O		TB2-20	RESET	

Note: 4-20mA output is not available for Full Duplex (4-wire serial), TB2-16->Y and TB2-17->Z

TYPICAL WIRING DIAGRAM

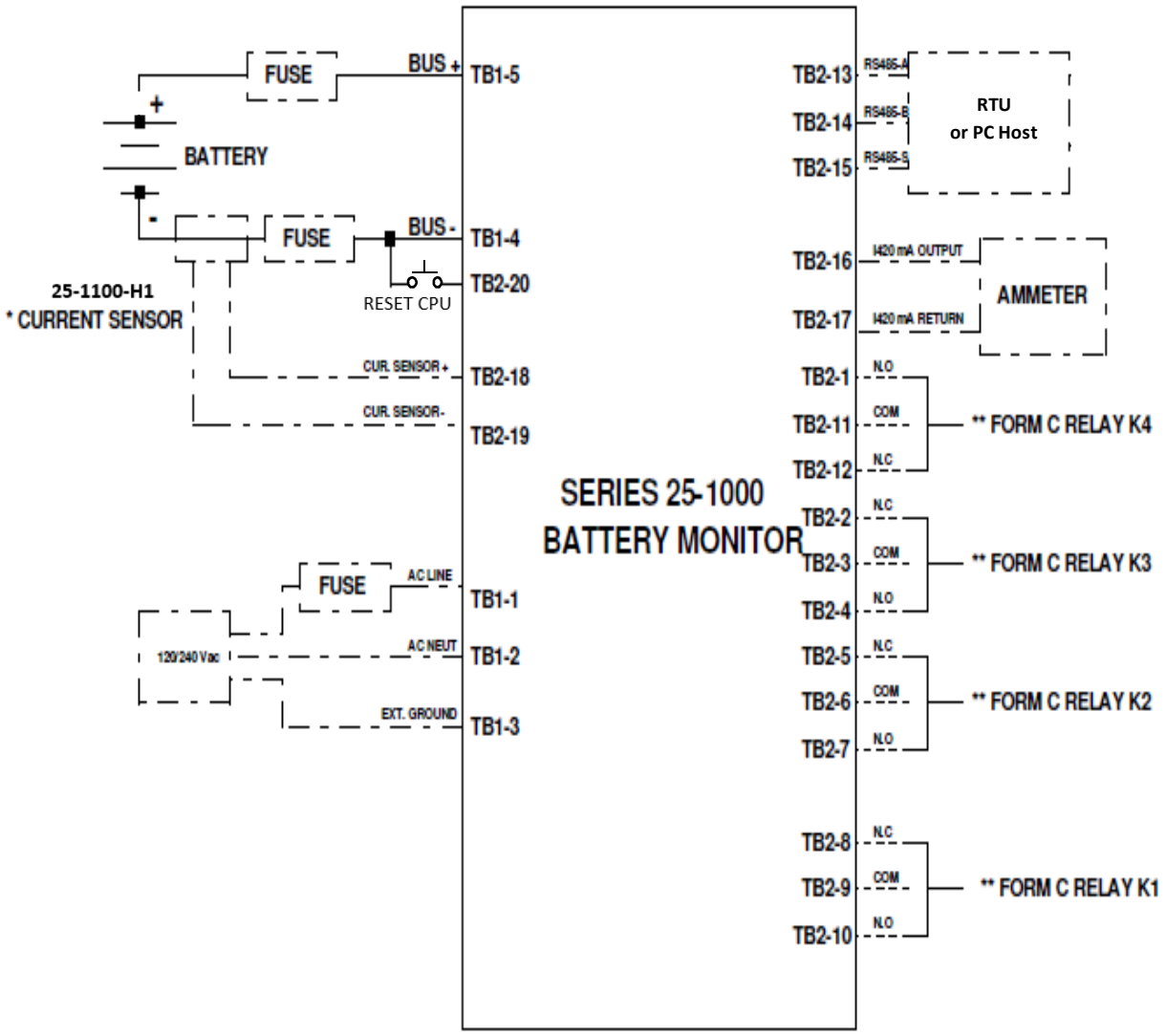

NOTE:

* SENSING RIPPLE CURRENT FOR HIGH IMPEDANCE DETECTION

** REFER TO TOP LEVEL DRAWING FOR THE FUNCTIONATIOLATY OF EACH RELAY

MECHANICAL DIMENSIONS

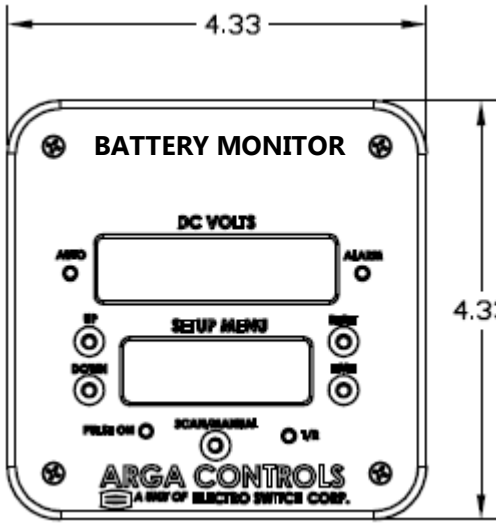

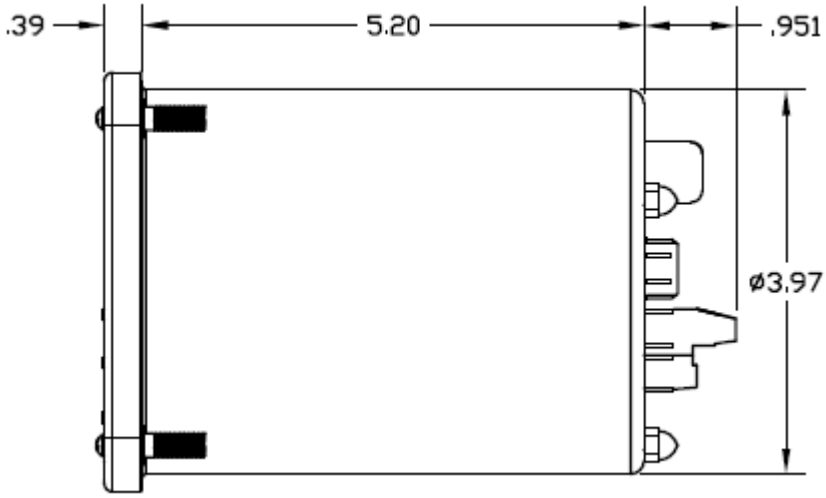

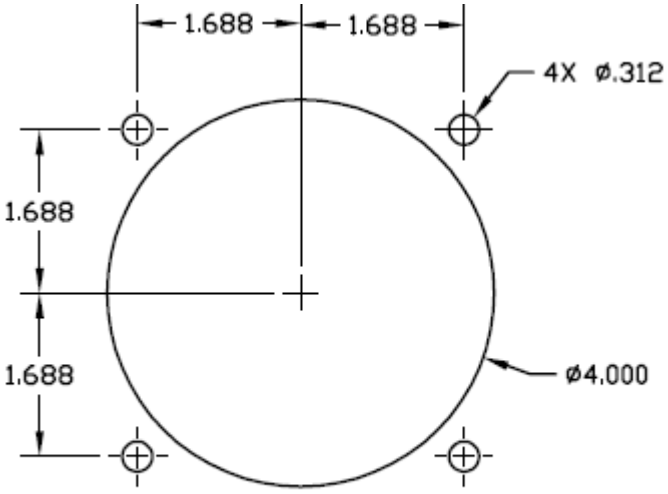
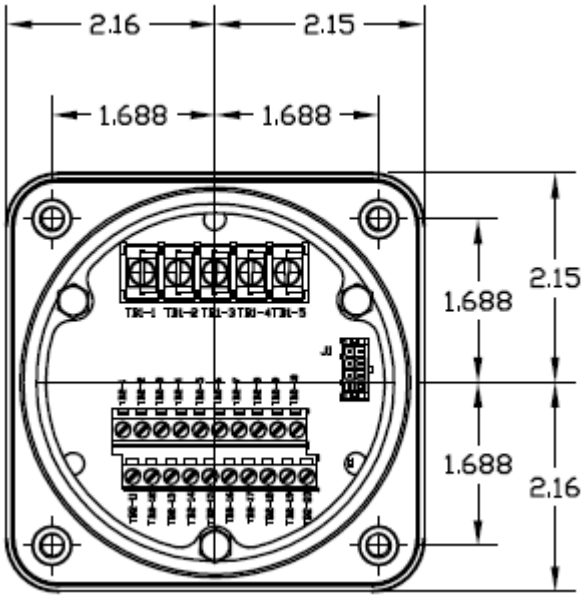
PANEL CUTOUT