ELECTROSWITCH
UNIT OF ELECTRO SWITCH CORP.
WEYMOUTH, MASSACHUSETTS 02188
TEL: (781)335-5200 FAX: (781)335-4253

SERIES 24P CONTROL SWITCH RELAY W/ DNP SERIAL INTERFACE

S88DGWRX57D

#8-32 X 0.25 BD. HD. TERMINAL SCREWS SUPPLIED UN-ASSEMBLED.

(3) #10-32 MOUNTING SCREWS SUPPLIED

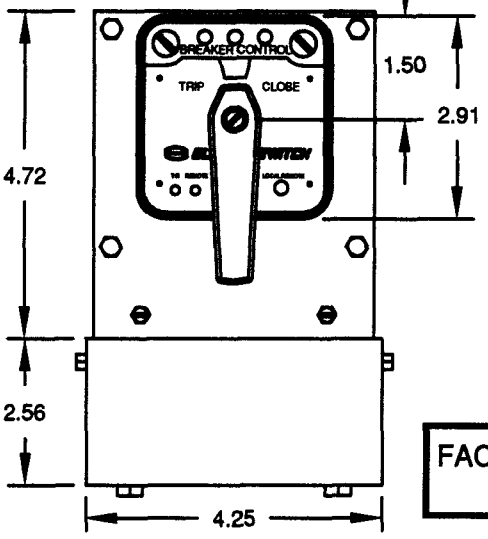

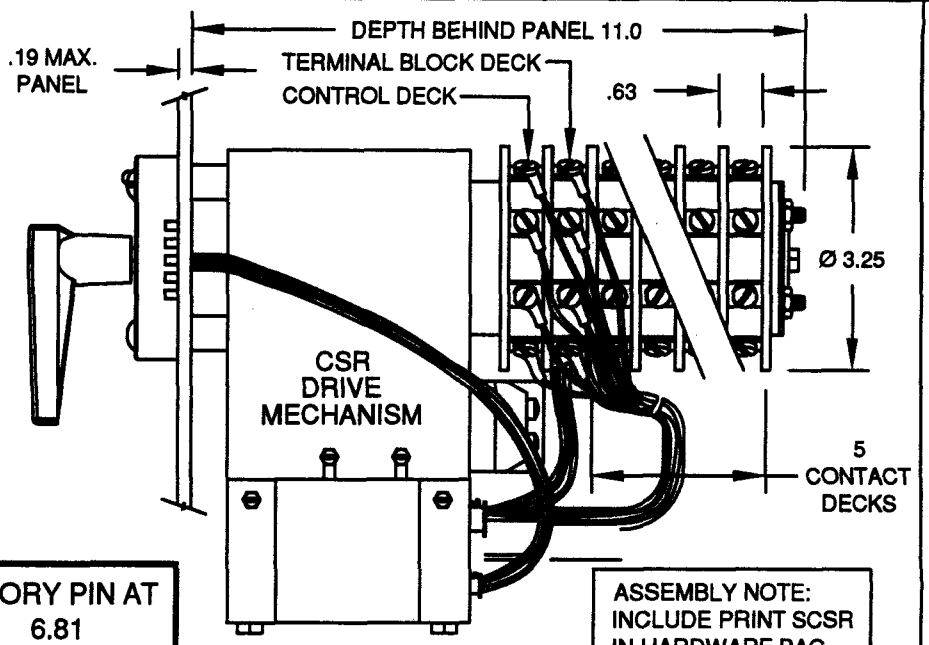

FACTORY PIN AT 6.81

ASSEMBLY NOTE: INCLUDE PRINT SCSR IN HARDWARE BAG.

CONTROL CIRCUIT B - 125 VDC

ACTION: SPRING RETURN TO POSITION 2

TITLE: BREAKER CONTROL

DECK	CONTACTS	POSITION ENG'V'G: TRIP	(nat)	(nac)	CLOSE
		POSITIONS:	2 FROM		
		1	1	3	3
1	12 o-|-|-o 13				X
	16 o-|-|-o 17				X
2	21 o-|-|-o 28	X			
	24 o-|-|-o 25	X			
3	31 o-|-|-o 32		X	X	
	35 o-|-|-o 36		X	X	
4	42 o-|-|-o 43			X	X
	46 o-|-|-o 47			X	X
5	51 o-|-|-o 52	X	X		
	55 o-|-|-o 56	X	X		

HANDLE POSITIONS

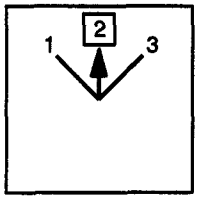

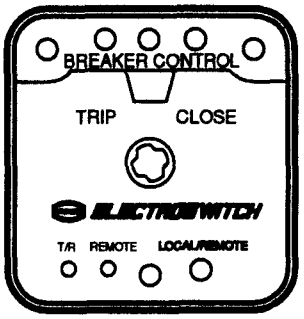

H	A	B	C	D	E	F	G
●	●	●	●	●	●	●	●
N1	N2	N3	N4	N5	N6	N7	N8
●	●	●	●	●	●	●	●
11	12	13	14	15	16	17	18
○	●	●	○	○	●	●	○
21	22	23	24	25	26	27	28
●	○	○	●	●	○	○	●
31	32	33	34	35	36	37	38
●	●	○	○	●	●	○	○
41	42	43	44	45	46	47	48
○	●	●	○	○	●	●	○
51	52	53	54	55	56	57	58
●	●	○	○	●	●	○	○

JUMPERS AND TERMINALS SUPPLIED AS SHOWN

CONTACT DECKS

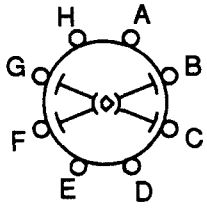

CONTROL DECK

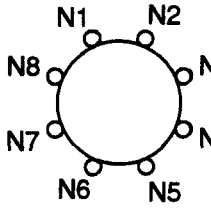

TERMINAL BLOCK DECK

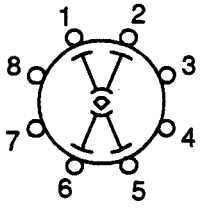

DECKS 1-3 BBM

COUPLING

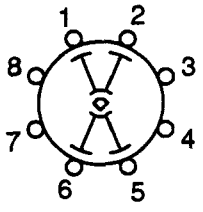

DECKS 4 & 5 BBM (SLIP CONTACTS)

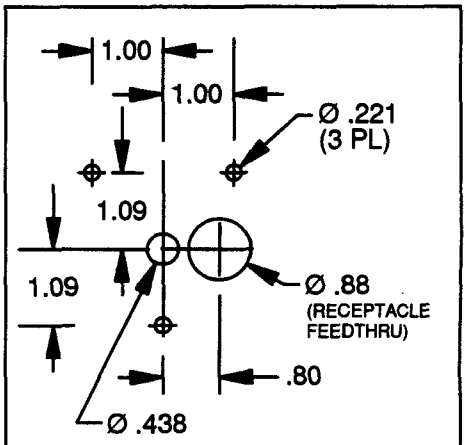

PANEL DRILLING

REVISIONS:
A ECN# 28979 MK 01-15-08 AL
B ECN# 29681 BC 04-27-10
C ECN# 29976 CMM 05-04-11

MADE BY: WCK	DATE: 10-18-07		REV C
APPR BY: WCK	DATE: 10-18-07	SHEET 1 OF 3	

ELECTROSWITCH
UNIT OF ELECTRO SWITCH CORP.
WEYMOUTH, MASSACHUSETTS 02188
TEL: (781)335-5200 FAX: (781)335-4253

SERIES 24P CONTROL SWITCH RELAY W/ DNP SERIAL INTERFACE

DWG. NO: S88DGWRX57D

OPERATING VOLTAGE: 106 -140 VDC

FACTORY SET
BAUD RATE = 9600

USER CONNECTIONS

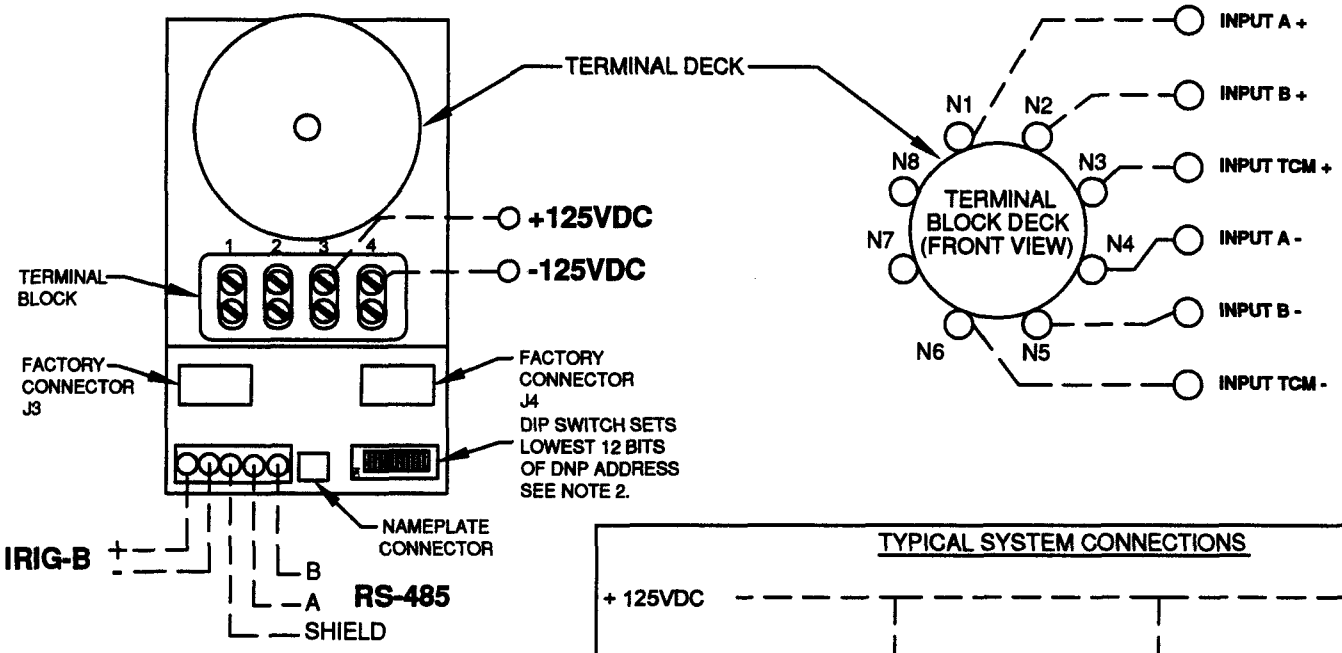

TYPICAL SYSTEM CONNECTIONS

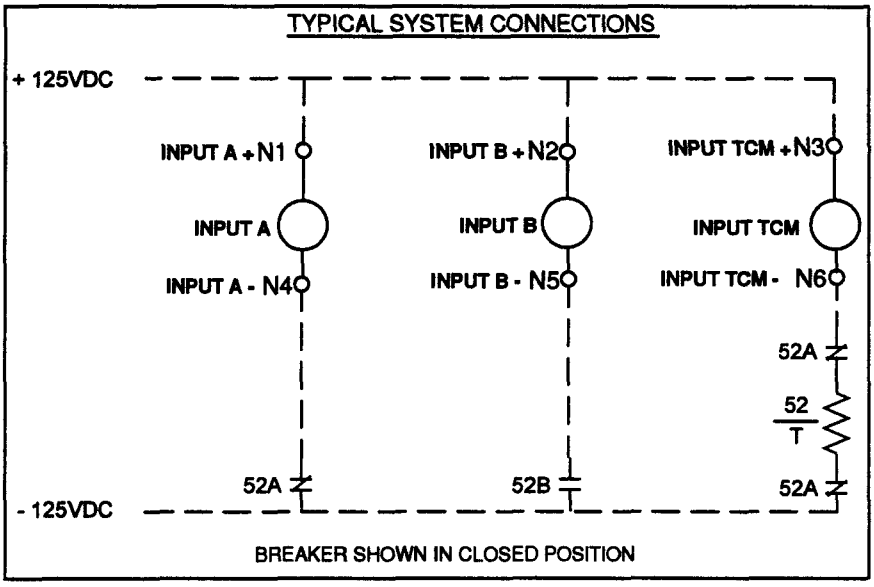

BREAKER SHOWN IN CLOSED POSITION

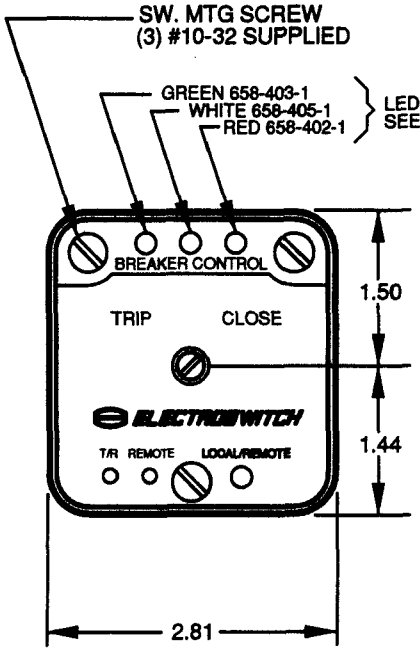

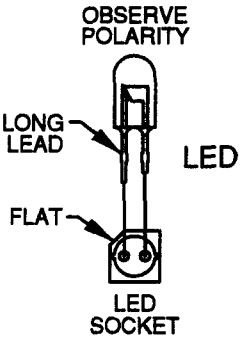

FIG. 1

NOTES:

1. OBSERVE POLARITY WHEN INSERTING LED IN SOCKET (SEE FIG.1)
2. REFER TO TECHNICAL MANUAL ES-SCSR-1 FOR ADDITIONAL INFORMATION INCLUDING SETTING BAUD RATE AND HIGH 4 BITS OF ADDRESS.

USAGE OF INPUTS A, B AND TCM

INPUT A CONTROLS THE RIGHT LED AND SETS DNP OBJECT 1 POINT 4. IN A TYPICAL APPLICATION IT IS USED TO MONITOR A 52A CONTACT.

INPUT B CONTROLS THE LEFT LED AND SETS DNP OBJECT 1 POINT 3. IN A TYPICAL APPLICATION IT IS USED TO MONITOR A 52B CONTACT.

INPUT TCM CONTROLS THE CENTER LED AND SETS DNP OBJECT 1 POINT 5. IN A TYPICAL APPLICATION IT IS USED AS A TRIP COIL MONITOR.

THE INPUTS ARE POLARITY SENSITIVE. REVERSE POLARITY CAUSES NO DAMAGE, BUT INPUT WILL NOT BE SENSED.

CONSULT THE TECHNICAL MANUAL ES-SCSR-1 FOR FURTHER INFORMATION ON DNP3 USAGE, INCLUDING SYSTEM BATTERY VOLTAGE MEASUREMENT, TIME STAMPING OF EVENTS, AND SENSING OF SWITCH POSITION.

REVISIONS: SEE SHEET 1

MADE BY: WCK	DATE: 10-18-07		REV C
APPR BY: WCK	DATE: 10-18-07	SHEET 2 OF 3	

ELECTROSWITCH
UNIT OF ELECTRO SWITCH CORP.
WEYMOUTH, MASSACHUSETTS 02188
TEL: (781)335-5200 FAX: (781)335-4253

SERIES 24P CONTROL SWITCH RELAY W/ DNP SERIAL INTERFACE

DWG. NO: S88DGWRX57D

OPERATING VOLTAGE: 106-140 VDC

FACTORY CONNECTIONS

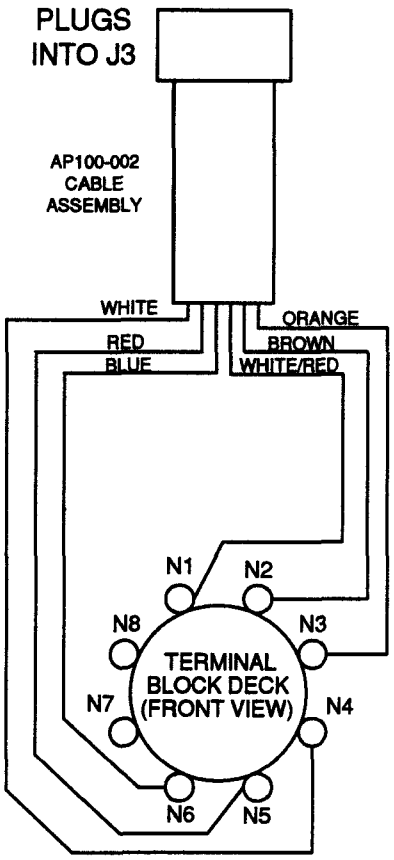

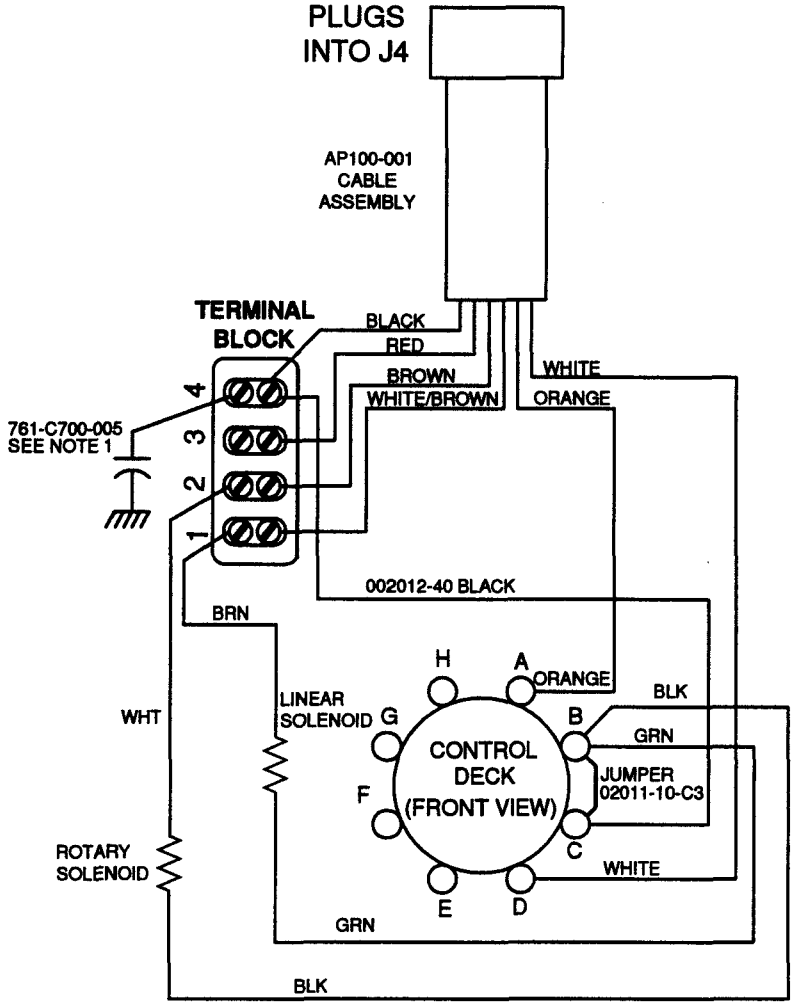

AP100-002 CONNECTIONS	
TERMINAL BLOCK POS.	COLOR
N1	WHITE/RED
N2	BROWN
N3	ORANGE
N4	WHITE
N5	RED
N6	BLUE

AP100-001 CONNECTIONS	
CONNECTION POINTS	COLOR
TB1	WHITE/BROWN
TB2	BROWN
TB3	RED
TB4	BLACK
A	ORANGE
D	WHITE

ROTARY AND LINEAR SOLENOID CONNECTIONS		
CONNECT TO	ITEM	LEAD COLOR
TB1	LINEAR SOLENOID	BROWN
B	ROTARY SOLENOID	BLACK
TB2	ROTARY SOLENOID	WHITE
B	LINEAR SOLENOID	GREEN

NOTES:
1. REFER TO ES-246-2 ENGINEERING STANDARD FOR DETAILS.

REVISIONS: SEE SHEET 1

MADE BY: WCK	DATE: 10-18-07		REV C
APPR BY: WCK	DATE: 10-18-07	SHEET 3 OF 3	