ELECTROSWITCH
UNIT OF ELECTRO SWITCH CORP
Weymouth, Massachusetts 02188
Tel: 617/335/5200 • FAX: 617/335/4253

TYPE W2 SWITCH

SWITCH NUMBER 508A299G03
ENGRAVING CODE 63F-4A22C

HANDLE
SHAPE Round
☒ FIXED
☐ REMOVABLE

☒ MAINTAINED
☐ SPRING RETURN

1/4 MAX PANEL
3 STAGES
6 CONTACTS / STAGE

	10	11	12	1
A11 - B11	X	X		
A12 - B12		X	X	
A1 - B1			X	X
A5 - B5	X	X		
A6 - B6		X	X	
A7 - B7			X	X
C11 - D11	X	X	X	X
C12 - D12	X	X	X	X
C1 - D1	X	X	X	X
C5 - D5	X	X	X	X
C6 - D6	X	X	X	X
C7 - D7	X	X	X	X
E11 - F11		X		
E12 - F12			X	
E1 - F1				X
E5 - F5		X		
E6 - F6			X	
E7 - F7				X
-				
-				
-				
-				
-				
-				
-				
-				

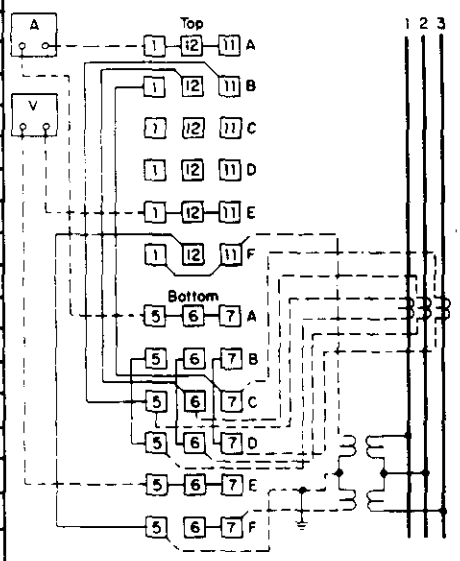

HANDLE POSITION

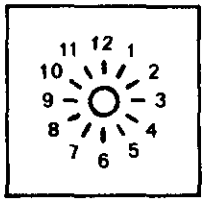

NAMEPLATE

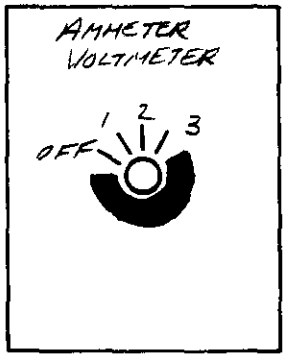

☒ STANDARD
☐ TARGET

CONN NO.	BETWEEN TERM	BETWEEN TERM	CONN NO.	BETWEEN TERM	BETWEEN TERM	CONN NO.	BETWEEN TERM	BETWEEN TERM
1	A11 THRU	A1	3	F12	F5			
1	E11 THRU	E1						
1	A5 THRU	A7	5	B1	C7			
1	E5 THRU	E7	5	B12	C6			
1	F6	F7	5	B11	C5			
2	F1	E11						
2	B5	D5						
2	B6	D6						
2	B7	D7						

STOP PIN LOCATIONS 10 & 2
KEY BEARING ANGLE _____
SET PULL GUIDE ON _____
PUNCH GUIDE AT _____

STAGE	1	2	3	4	5	6	7	8
STATOR	A	C	A					
ROTOR	FL	XB	FB					

REVISIONS
A ECN #17255 12/29/89 ES
B ECN #17945 10-20-89

MADE BY:	DATE: 9-29-89	ENGINEERING CODE:	DWG. NO: 508A299G03	REV
APPR. BY:	DATE: 10-2-89	A431AOAC-017	SHEET / OF /	B