ELECTROSWITCH
UNIT OF ELECTRO SWITCH CORP.
WEYMOUTH MASSACHUSETTS 02188
TEL:(781)335-5200 FAX:(781)335-4253

SERIES 24 CONTROL SWITCH

24209B

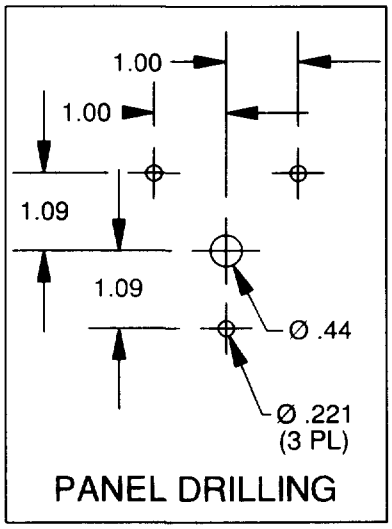

PANEL DRILLING

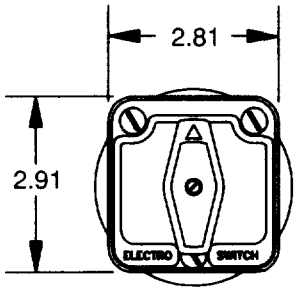

(3) #10-32
MOUNTING SCREWS
SUPPLIED

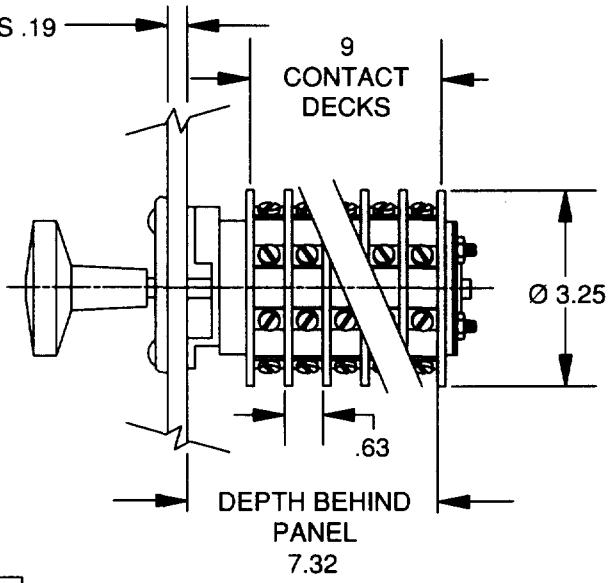

8-32 X 0.25
BD. HD. TERMINAL SCREWS
SUPPLIED UN-ASSEMBLED.

SPECIAL FEATURES:
SWITCH IS SUPPLIED WITH HARDWARE FOR LIMITING SWITCH AS DESIRED (NOTE; CONTACTING REPEATS IF MORE THAN 4 POSTIONS ARE USED).

ACTION: MAINTAINED

DECK	CONTACTS	POSITION 1	2	3	4	5	6	7	8
1	11 — 12	X				X			
	12 — 13		X				X		
	13 — 14			X				X	
	14 — 15				X				X
	15 — 16	X				X			
	16 — 17		X				X		
	17 — 18			X				X	
	18 — 11				X				X

DECKS 2-9 ARE THE SAME AS DECK 1
EXCEPT FOR TERMINAL NUMBERS.

CONTACT DECKS

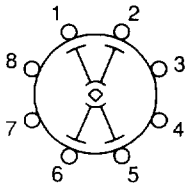

DECKS 1-9 BBM

SEE TECHNICAL BULLETIN 24-1 FOR APPLICATION INFORMATION AND TERMINAL CONTACTS.

STANDARD
NAMEPLATE
SUPPLIED
ENGRAVED
TO ORDER

HANDLE
POSITIONS

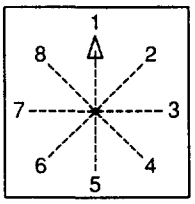

11	12	13	14	15	16	17	18
21	22	23	24	25	26	27	28
31	32	33	34	35	36	37	38
41	42	43	44	45	46	47	48
51	52	53	54	55	56	57	58
61	62	63	64	65	66	67	68
71	72	73	74	75	76	77	78
81	82	83	84	85	86	87	88
91	92	93	94	95	96	97	98

TERMINALS SUPPLIED
AS SHOWN

REVISIONS:
C ECN # 11512 01-8-82 JR
D ECN 27898 02-24-05 WCK

MADE BY: ——	DATE: 05-25-73		DWG NO:		REV. D
APPR. BY: ——	DATE: 05-25-73		SHEET 1 OF 1		